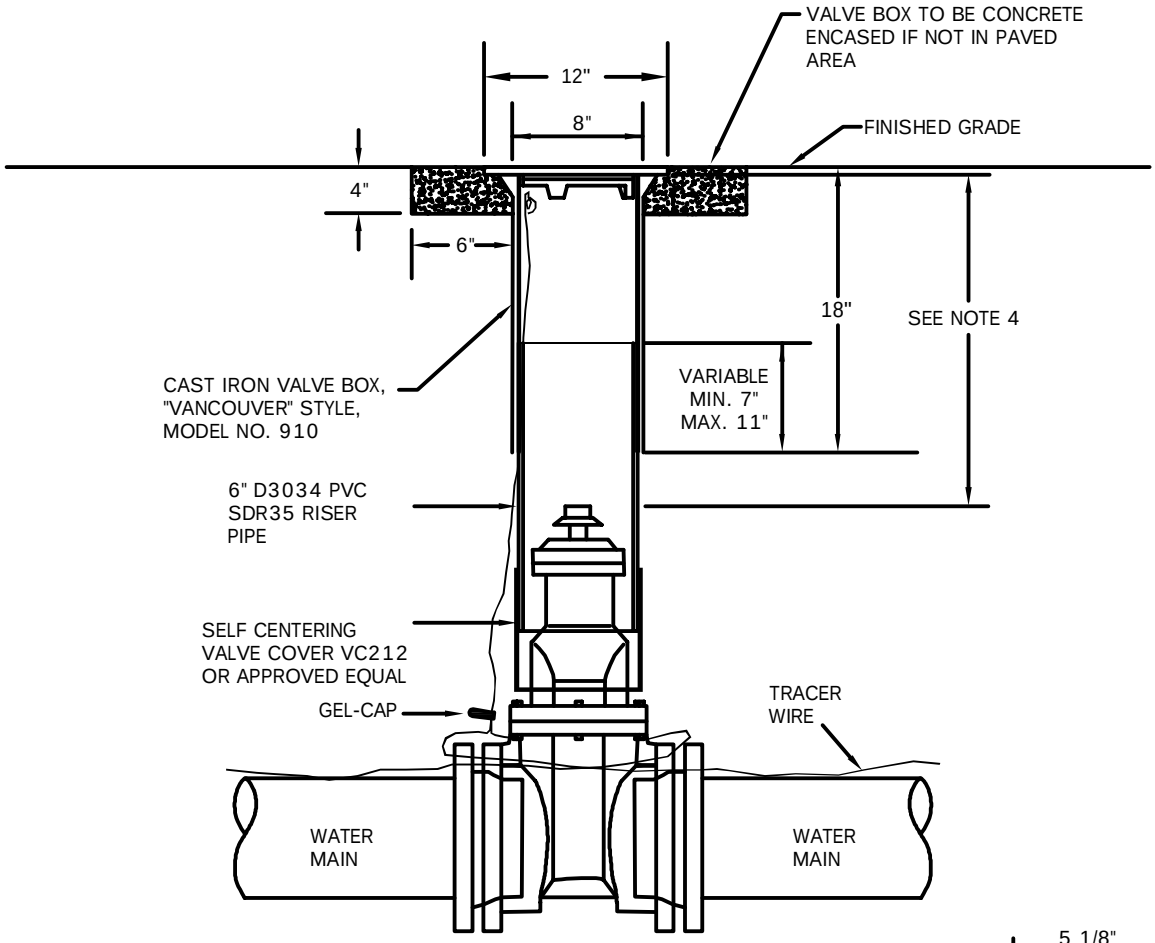

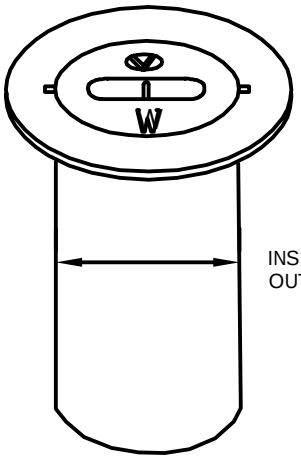

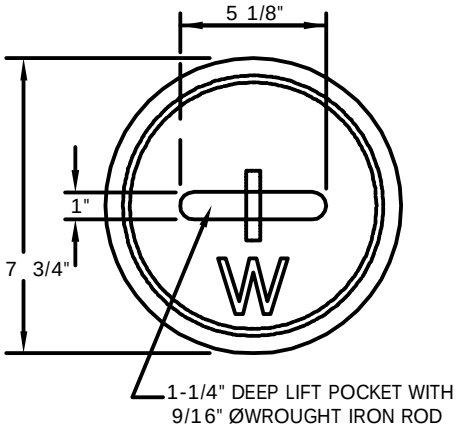

COVER PLAN

NOTES:
1. VALVE BOXES SHALL BE CENTERED DIRECTLY OVER THE VALVE NUT IN A VERTICAL POSITION.
2. VALVE BOX TOP SHALL BE ADJUSTED TO MEET FINISHED GRADE.
3. PVC RISER SHALL BE ONE CONTINUOUS PIECE
   - NO BELLS OR COUPLERS.
4. WHERE DEPTH OF OPERATING NUT IS GREATER THAN 3 FEET PROVIDE OPERATING EXTENSION TO A POINT 18" BELOW FINISH GRADE.
5. VALVE BOXES SHALL BE MANUFACTURED USING DOMESTIC CAST IRON ONLY.

Detail Drawing may not be altered or changed in any manner except by the Public Works Director. It is the responsibility of the user to acquire the most current version.

CITY OF MOLALLA
DEPARTMENT OF PUBLIC WORKS

WATER VALVE BOX & LID DETAIL

DRAWN BY	PDG	01/2016
CHECKED BY	JC	01/2016

W-3020